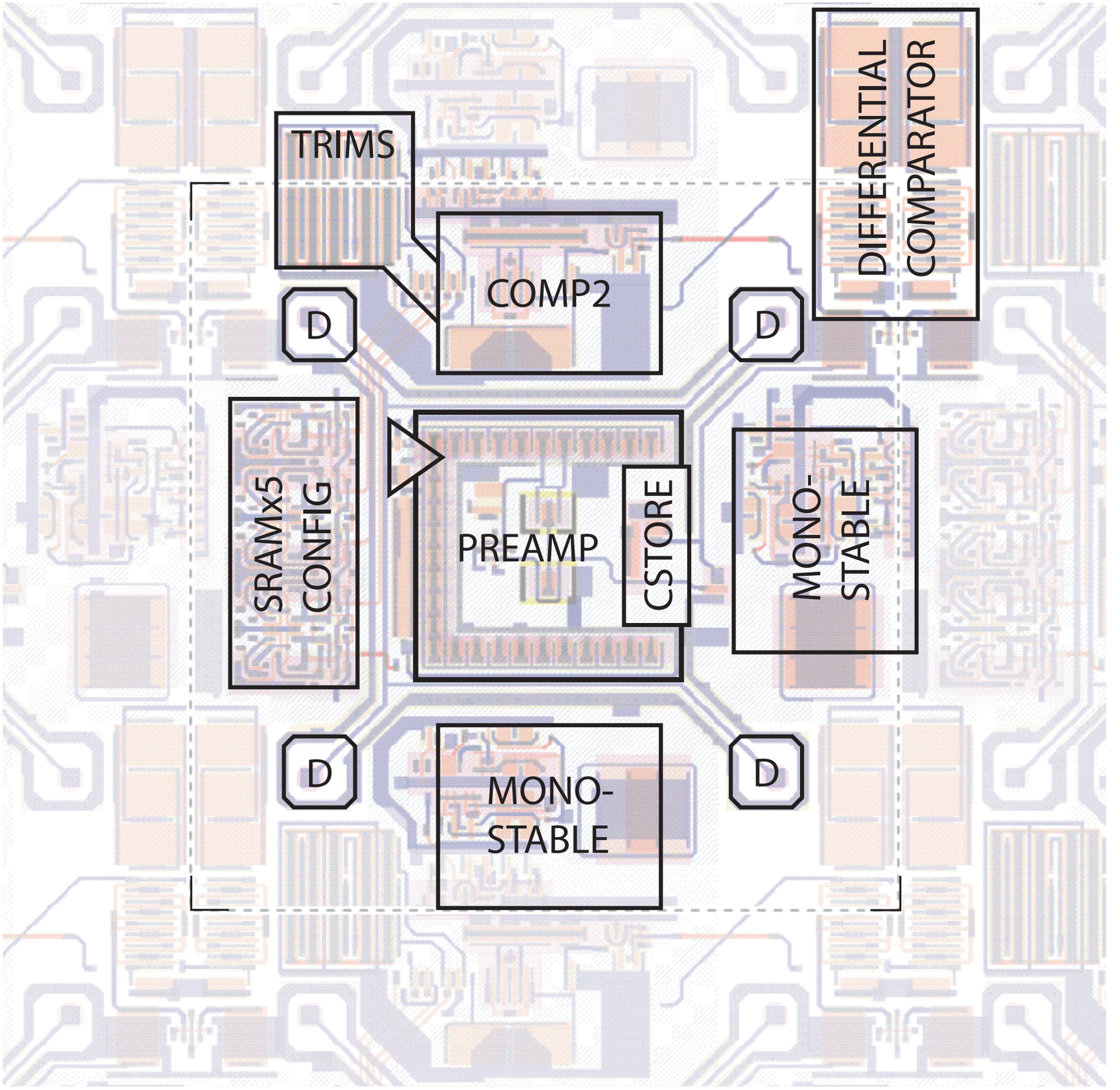
TRIMS
COMP2
DIFFERENTIAL COMPARATOR
D
D
SRAMx5 CONFIG
PREAMP
CSTORE
MONO-STABLE
D
D
MONO-STABLE