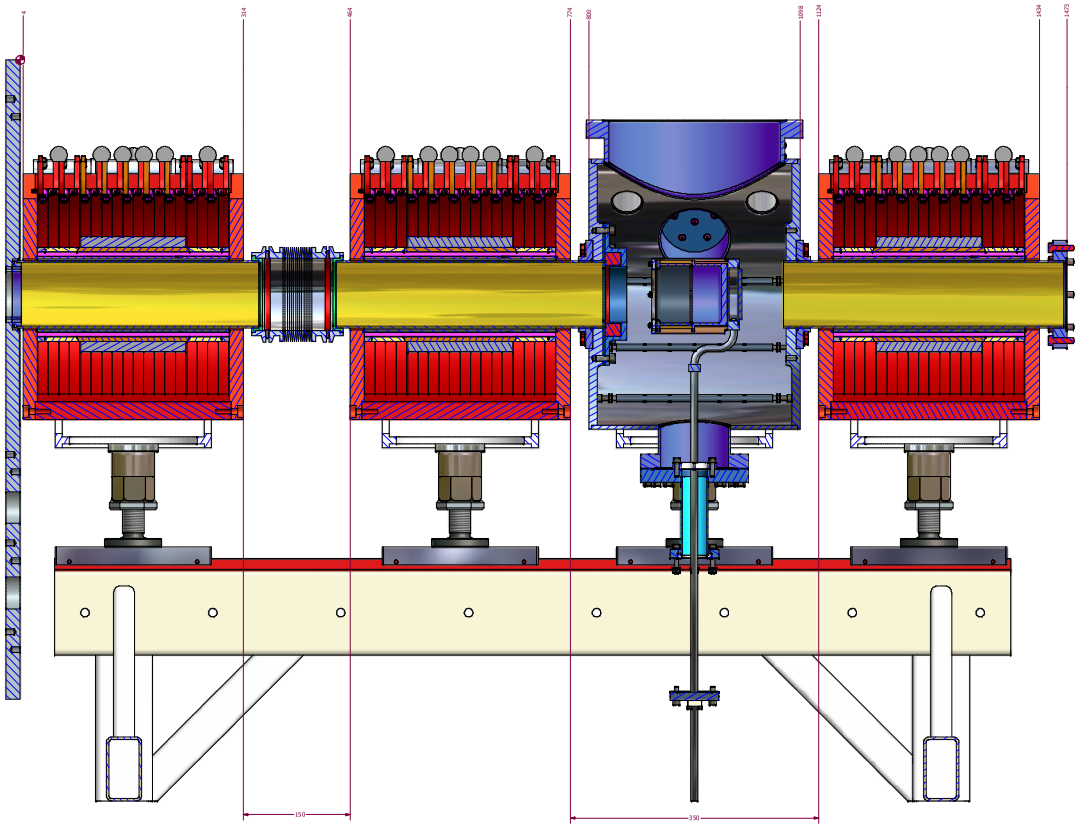

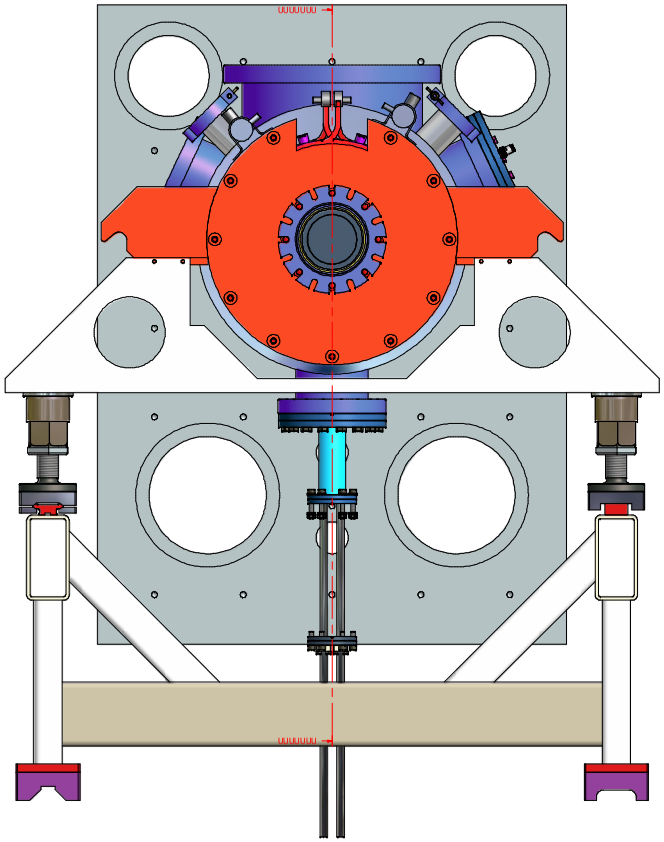

Title:			
Drawn by:	Projection:		
Designed by:	Model file:	UBT Complete2.iam	
Checked by:	Drawing file:	UBT.slw	
Date:	Version number:		
Manufactured by:	Project:		
Material:	Sheet number:	25 / 25	
Finish:	Number off:		
Scale:	Drawing number :		
Notes:			

Unless otherwise stated:

Dimensional tolerance :	X	± 0.5 mm
	X.X	± 0.2 mm
	X.XX	± 0.1 mm
Angular tolerance:		± 0.5°
Hole centres:		± 0.05 mm
Surface finish :		1.6 microns
Dimensions in mm		□

Contact: p.savage@imperial.ac.uk (Work) 0207 594 7817 (Mobile) 07894 260858