APV25s1

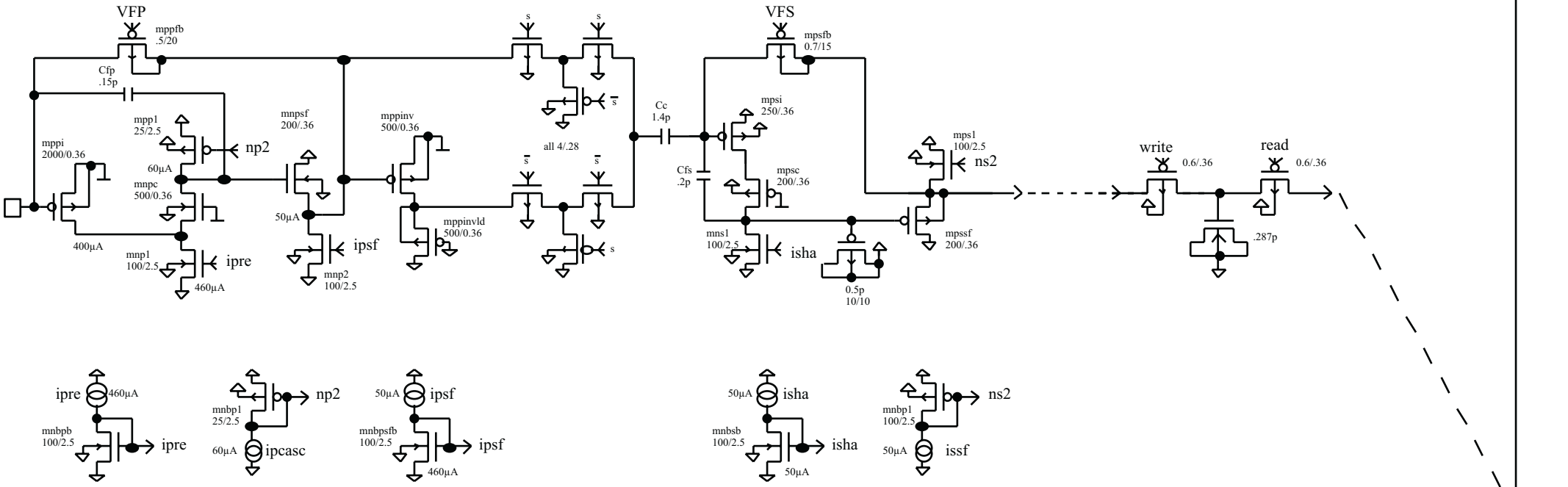
VFP
mppfb
.5/20
Cfp
.15p
mppi
2000/0.36
mpp1
25/2.5
np2
60µA
mnpc
500/0.36
400µA
mnp1
100/2.5
ipre
460µA
mnpsf
200/.36
50µA
ipsf
mnp2
100/2.5
mppinv
500/0.36
mppinvld
500/0.36
s
s̄
all 4/.28
Cc
1.4p
Cfs
.2p
VFS
mpsfb
0.7/15
mpsi
250/.36
mpsc
200/.36
mns1
100/2.5
isha
0.5p
10/10
mps1
100/2.5
ns2
mpssf
200/.36
write
0.6/.36
read
0.6/.36
.287p
ipre
460µA
mnbpb
100/2.5
ipre
mnbp1
25/2.5
np2
60µA
ipcasc
50µA
ipsf
mnbpsfb
100/2.5
ipsf
460µA
50µA
isha
mnbsb
100/2.5
isha
50µA
mnbp1
100/2.5
ns2
50µA
issf